ARCHIVES OF ACOUSTICS
16, 1, 53-72(1991)

MEASUREMENT OF QUARTZ CRYSTAL RESONATORS AND FILTERS IN THE PRODUCTION PROCESS

W. J. McCARTNEY

Transat Corporation
(31000 Bainbridge Road, Solon, Ohio 44118, USA)

1. Introduction

The crystal manufacturing industry has been plagued by measurement problems though out its history. Producers and customers have had problems monitoring product specifications with sufficient accuracy to insure the final product meets the customer requirement. This problem is getting more severe where manufacturers are being pushed to provide very small lot production runs with high precision and low cost. This paper outlines some practical issues present for crystal producers and users. Several directions are presented to help minimize the problem. Key among these suggestions are the use of measurement techniques, fixtures and equipment compatible with current industry standards.

2. History

The measurement equipment used in crystal manufacturing to produce a product meeting the customer requirement has developed from using the customers actual and product circuitry.

This approach, although it offered the best compliance with the customer requirement, is usually impractical in a production environment. The typical case might involve the customer sending specialized test equipment that the producer would actually install as final test equipment. The approach has several practical problems. One of the most severe is that the production process must be calibrated to a non-traceable standard. This creates severe manufacturing start-up and measurement repeatability problems. The calibration and drift of the instrument places pressure on the manufacturing process to "track" the drift.

The quality CI meters from a number of vendors have reduced this problem somewhat, but the need for extended frequency range and good load capacitance correlation still plagued the industry.

Modern precision frequency synthesizers, vector voltmeters and high quality network analyzers have allowed the development of precision passive device measurement techniques based on them.

The need to measure devices accurately and reliably during the production process becomes more difficult at higher frequencies were the traditional measurement techniques are not accurate enough or the measurement technique does not have the bandwidth to track the device during an adjustment process.

A different set of difficulties occur in the frequency adjustment of monolithic filters. The production monitoring is more difficult because of the dynamics of the device can change as it is being adjusted. The problems of consistent measurement results and device mask alignment both must be resolved.

3. Measurement issues

The problems with correlating measurements can generally be divided into two areas, customers — the crystal end user — and producer — the crystal manufacturer. Measurement standards such as the IEC 444 and the EIA 512 utilizing precision measurement equipment help reduce some of these problems.

3.1. *Crystal users*

The crystal user wants to insure that the product he receives from the crystal manufacturer meets the design requirements. He should identify critical crystal device parameters early in the design process. This is often not the case. The equipment designer may have only a limited concept of the device and often must define the actual measurement equipment and technique for qualifying the part. This creates a problem with standardization in larger organizations as well as with consistency in how the product is specified internally and how the part is specified to the crystal manufacturer.

3.2. *Crystal manufacturers*

The crystal manufacturer wants to be able to correlate device monitors between each of his production steps as well as final inspection. It is essential for the multinational producer to have this capability to insure that devices manufactured around the world will comply with product specifications. This allows the manufacturer the flexibility produce the product at different facilities that may be optimized for lot sizes.

4. Crystal measurements

4.1. Active techniques

The oscillator measurement technique can be based upon designing a specialized test oscillator circuit or a CI meter. If a custom test circuit is designed with close attention to the target circuit design, this method offers the possibility of providing the best results for the application of the part. However, the penalty with this type of approach is that a "new" piece of test equipment may need to be introduced for each different part or class of part. Traceability and inter-facility correlation problems make this approach clearly undesirable.

The CI meter was developed to extract the motional parameters of the crystal. Although limited in precision at frequencies beyond 60 MHz, it provides a means to simulate the operation of the crystal in an active network. Problems with frequency range, load capacitance correlation and fixtures prevent the use at frequencies much beyond the 60 Mhz limit.

4.2. Passive techniques

Passive measurement techniques utilizing the *PI* networks or other fixtures have become widely acacepted in industry. Establishment of the IEC 444 (Ref. [7]) and EIA 512 (Ref. [6]) and their various extensions have enabled the producer and user of crystal units a much better measurement of the crystal device both in production final test and the device user's incoming inspection.

4.3. Test fixtures

The most widely accepted test fixture for measurement is the *PI* network (Fig. 1). A number of configurations are possible, the most widely accepted is the IEC 444 PI network. The use of computer calibration of these devices has improved the accuracy of

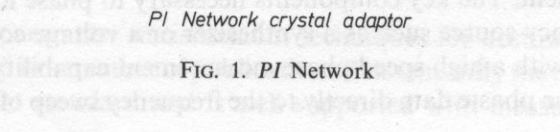

FIG. 1. *PI* Network

the network and reduced the precision requirement of the original IEC network (Ref. [1], [9], [12]).

Other networks hold some promise. The *T* network has some advantages for measurement of high frequency devices. Because of the possibility of coaxial construction, it may have future use as a standard crystal device adaptor.

Special *PI* networks are available that allow for insertion of load capacitances for measurement and final adjustment. These networks give the measurement system the capability to control whether the load capacitance is active by switching the load capacitance on or off by remote control (Fig. 2). This offers the potential for automation of the use of load capacitance measurements.

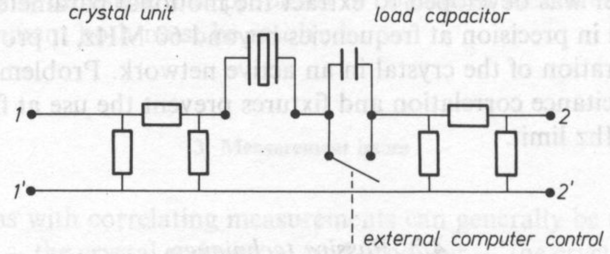

TRANSAT model TFP-5 PI Network crystal adaptor

FIG. 2. Switching load CL *PI* Network

5. Current production equipment

5.1. CI and oscillator based measurements

These types of equipment typically suffer from poor measurement capability at higher frequencies. Some of this equipment offers high speed frequency tracking for fast frequency adjustment. Special fixtures are required for load capacitance measurements. The lack of a standard network makes it difficult to correlate measurements from site to site because of the strong dependance on electrical length of the circuitry contacting the crystal unit.

5.2. Phase locked transmission measurement

Phase locked transmission measurement technique can be implemented with a variety of equipment. The key components necessary to phase lock to a crystal are a sweepable frequency source such as a synthesizer or a voltage controlled oscillator, a vector voltmeter with a high speed phase measurement capability, and a phase lock module to couple the phaste data directly to the frequency sweep of the source. (Fig. 3)

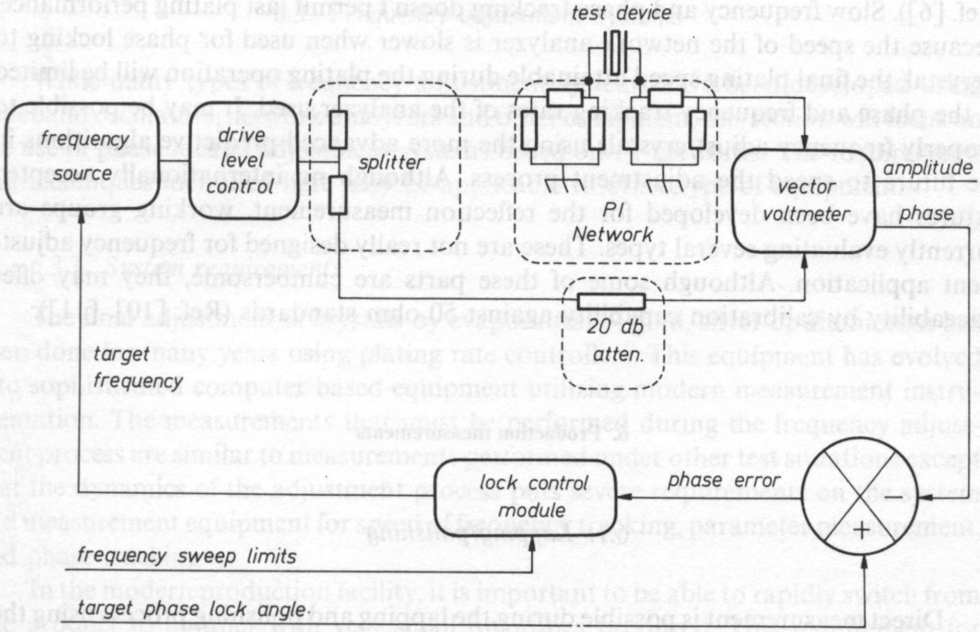

FIG. 3. Simplified phase locked transmission system

A matching *PI* network with well defined electrical parameters is typically used to couple the crystal to the measurement device,

The phase locked transmission measurement method has been widely accepted for measurement by international standard for accuracy. (Ref. [1], [2]). The addition of computer based error correction capability has increased the frequency range and accuracy of the *PI* network based transmission measurement up to nearly 1 GHz (Ref. [1], [12]).

High speed device tracking for good plating performance is possible with phase locked transmission measurement systems. The actual frequency tracking rates are dependant on the device the frequency sweep and phase lock equipment used. Practical adjustment systems with rates beyond 10 000 ppm per second are possible with an agile frequency source and a precision high speed vector voltmeter. Standard *PI* networks are available with excellent performance up to 1 GHz (Ref. 1). Traceable references are now being developed for the *PI* network to assist in calibration.

5.3. *S. Parameter measurement*

The use of *S* parameter measurement techniques for accurate measurement of crystals is supported in a number of publications. It is currently the basis of the EIA-512 crystal measurement standard and is well supported with measurement techniques

(Ref. [6]). Slow frequency and phase tracking doesn't permit fast plating performance. Because the speed of the network analyzer is slower when used for phase locking to a crystal, the final plating speed attainable during the plating operation will be limited to the phase and frequency tracking rates of the analyzer used. It may be possible to properly frequency adjust crystals using the more advanced predictive algorithms in the future to speed the adjustment process. Although no internationally accepted fixtures have been developed for the reflection measurement, working groups are currently evaluating several types. These are not really designed for frequency adjustment application. Although some of these parts are cumbersome, they may offer traceability by calibration capability against 50 ohm standards (Ref. [10], [11]).

6. Production measurements

6.1. Lapping/polishing

Direct measurement is possible during the lapping and polishing process using the automatic lap controllers (Ref. [21]). These units monitor the frequency of the lap load during lapping by utilizing a monitor electrode inserted in one of the lap plates. They operate by repetitively sweeping a frequency and observing the blanks as they pass above or beneath the electrode.

This instrument also offers the cappability of remote communication to a host computer. With this capability, lap load monitor information can be sent directly to a factory management system. Targeting information can be provided directly from the factory management system.

6.2. Etching

At present, control of temperature, time and acidity of the bath are used to try to control the etching process. This involves removing the blanks from the bath during the process to check the progress. A new type of instrument is now available for automatically monitoring the etching process without having to remove the blanks and individually test them. These instruments can use either a monitor blank or a blank from the etch load to monitor the progress of the etch. (Ref. [19], [22]).

The advantages for this instrument are immediately apparent. Close monitoring of the chemical and thermal characteristics of the etch bath can be relaxed. Remote communication capability to a factory management system is also possible to allow for external tracking of the etch process.

6.3. Frequency adjustment systems

While many types of frequency adjustment systems have been developed using wideband oscillators, network analyzers and other equipment, this section will focus on the use of phase locked adjustment systems based on *PI* networks. The requirements and techniques identified here may be applicable to other type of equipment.

6.3.1. System requirements

The final adjustment of crystals by evaporation of gold, silver or aluminium has been done for many years using plating rate controllers. This equipment has evolved into sophisticated computer based equipment utilizing modern measurement instrumentation. The measurements that must be performed during the frequency adjustment process are similar to measurements performed under other test situations except that the dynamics of the adjustment process puts severe requirements on the system and measurement equipment for speed of frequency tracking, parameter measurement, and phase tracking.

In the modern production facility, it is important to be able to rapidly switch from one product to another with very small quantities produced. This requirement for flexible manufacturing is directly reflected in the profitability of companies specializing in high precision, small lot size crystals. This forces the use of easily alterable systems that have the correct options and features quickly selectable.

6.3.2. Targeting

The process of targeting these systems must be rapid without requiring a great deal of calibration and tuning alignment. For the case of crystal units, the systems must be able to accept new frequency, load capacitance targets and process offsets directly.

The key components in targeting are:

- target frequency, parameters
- process offset(s)
- specification limits
- load capacitance

6.3.3. Load capacitance compensation

The measurement and frequency adjustment of devices with load capacitances poses a difficult problem for production measurement equipment. The system must be able to measure devices in both the load and unloaded conditions without any operator intervention. In addition, the measurement system must allow for changing the physical load capacitance used if required.

A numerical measurement technique for evaluating the loaded impedance of a device have been described using a numerical compensation methods (Ref. [13]) and an actual equivalent reactance measurement technique (Ref. [3]). The equivalent reactance method provides a method of measurement without any physical load. This offers flexibility for inspection measurements. However, because the devices are measured far away from resonance on the reactance slope, it is not possible to maintain phase lock to track the device during fast frequency adjustment. This makes the direct equivalent reactance method ineffective for production plating measurements.

Methods for compensating the crystal unit for load capacitance are either too slow for plating or require plating to stop temporarily while a parameter measurement is performed. These methods suffer from the time penalty of having to stop the plating process, perform a parameter measurement and resume plating to a new offset target. This should not be a problem when small quantities are being produced. With larger production runs, the actual physical load capacitance should be inserted into the network.

Three types of compensation are:

FULL PHYSICAL LOAD CAPACITANCE COMPENSATION
FULL NUMERICAL LOAD CAPACITANCE COMPENSATION
PARTIAL NUMERICAL LOAD CAPACITANCE COMPENSATION

6.3.3.1. Full physical load capacitance compensation. This method is one where that actual load capacitor is installed in the network. This method offers the fastest throughput with the penalty of more difficult setup and calibration. It is best used for standard capacitance values or larger lot sizes.

6.3.3.2. Full numerical load capacitance compensation. Numerical load capacitance compensation method involves performing a parameter measurement to calculate. Numerical load capacitance compensation method can maintain phase lock and so can still track the device during the plating process. An actual parameter measurement is performed on the device and a frequency offset is applied to the target frequency using the following relationship:

$$F_T = F_s(1 + C_1/(C_0 + C_L))^{1/2} \tag{1}$$

where: F_T is the adjusted target frequency, F_s is the series resonance frequency of the crystal unit measured, C_L is the desired target load capacitance, C_1 is the measured motional capacitance of the crystal unit measured.

While this method is useful for overtone crystals and fundamental crystals with large C_L/C_0 ratio, errors can be significant when measuring fundamental crystals when the C_L/C_0 ratio gets small (Ref. [4]). The largest problem pertains to the measurement accuracy requirements on C_1 and C_0. Another problem in frequency adjustment systems is that the device could be measured a large distance from the target where measured C_1 and C_0 values might change with further plating. Either error present in the measurement of C_1 and C_0 can lead to poor selection of a final target. There are techniques that can be used to overcome some of these limitations. The error caused by changes in the C_1 and C_0 parameters from subsequent plating can be reduced by offseting the initial frequency target closer to the actual final target. The errors present in the C_1 and C_0 measurements cannot be corrected.

The error present in the measurement can be modeled by assuming lossless crystals as:

$$E_1 = 25C_0/(n^2(C_0+C_L)) \tag{2}$$

where: E_1 is the error in ppm per % C_1 measurement error, n is the overtone number.

Let

$$K = C_L/C_0 \tag{3}$$

If KC_0 is substituted for C_L, then (2) becomes

$$E_1 = 25/n^2(1+K) \tag{4}$$

For this technique with fundamental crystals, as K gets small, the errors present in C_1 become more significant. For example, if a 1% C_1 measurement error is assumed, with a load capacitance of 20 pF and a C_0 of 4 pF, the targeting error would be 5 ppm. This limits the usefulness of this technique for fundamental crystals. Using the same parameters in the previous example, a third overtone would only have a targeting error of $5/n^2$ or 0.6 ppm.

The use of this technique in plating systems with the phase locked transmission measurement capability is:

a) phase lock to the crystal unit

b) plate the crystal to the offset target frequency, F_{T1} where F_{T1} is the target frequency derived from F_L, the loaded frequency target and any offsets.

c) perform a parameter measurement on the crystal unit and derive F_{s1}, C_{11}, and C_{01}; the crystal parameters measured at F_{T1}. Also calculate PH_1, the series resonance phase angle for F_{S1}.

d) calculate a final target frequency F_{T2} by:

$$F_{T2} = F_L/(1+C_{11}/(C_{01}+C_L))^{1/2} \tag{5}$$

e) phase lock the crystal at PH_1 and finish plating the crystal unit to the new target F_{T2}.

6.3.3.3. Partial numerical load capacitance compensation. Another approach for load capacitance plating is to allow for partial load compensation of devices using auxiliary load capacitors (Ref. [14]). With this technique, a load capacitance is placed in series with the device to partially compensate for the desired load capacitance. The parameters of this equivalent load device are recorded and a new offset target is developed in a similar fashion to the case of numerical load capacitance compensation except the measurement and targeting are adjusted for the effect of partial load capacitance compensation present in the network.

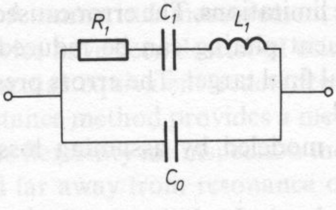

FIG. 4. Crystal equivalent circuit

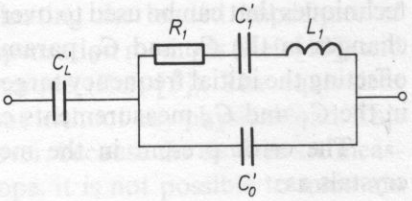

FIG. 5. Crystal equivalent circuit with load capacitor

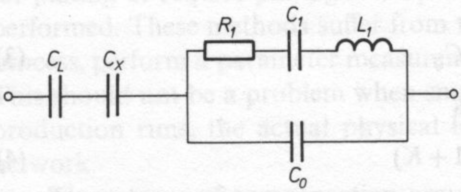

FIG. 6. Crystal equivalent circuit with load capacitor and partial load capacitance compensation

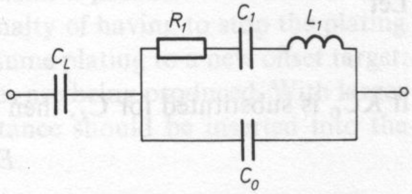

FIG. 7. Crystal equivalent circuit with partial load capacitor

In this approach, we develop a equivalent model (Figs. 6 and 7) of crystal incorporating C_X, where C_X is the partial load capacitance compensation using the following relationships:

$$C'_1 = \{C_1\,(C_X + C_0)/(C_X + C_0 + C_1)\} \tag{6}$$

$$C'_0 = C_0 C_X/(C_X + C_0) \tag{7}$$

$$C'_L = C_X C_L/(C_X - C_L) \tag{8}$$

and target frequency by:

$$F_X = F_L/(1 + C'_1/(C'_0 + C'_L))^{1/2} \tag{9}$$

where: F_X is the final target frequency for the crystal already partially compensated. Using this method, the plating would progress as:

a) phase lock to the crystal unit;

b) plate the crystal to the offset target frequency, F_{T1} where F_{T1} is the target frequency derived from F_L, the loaded frequency target and the offset;

c) perform a parameter measurement on the crystal unit for F'_{s1}, C_{11} and C'_{01}. Also calculate PH_1, the series resonance phase angle for F'_{S1};

d) calculate load capacitance C'_L of the crystal unit by (EQN 8);

e) calculate a final target frequency F_{T2} by:

$$F_{T2} = F_L/(1 + C'_{11}/(C'_{01} + C'_L))^{1/2} \tag{10}$$

f) phase lock the crystal at PH_1 and finish plating the crystal unit to the new target F_{T2}.

6.3.4. High frequency device plating

High frequency or high resistance crystal units pose a special problem for frequency adjustment systems because zero phase frequency f_r (Fig. 8) is not located at series resonance. Under these conditions, the admittance circle is becomes elevated as susceptance $w_s C_0$ approaches the conductance $1/R_1$.

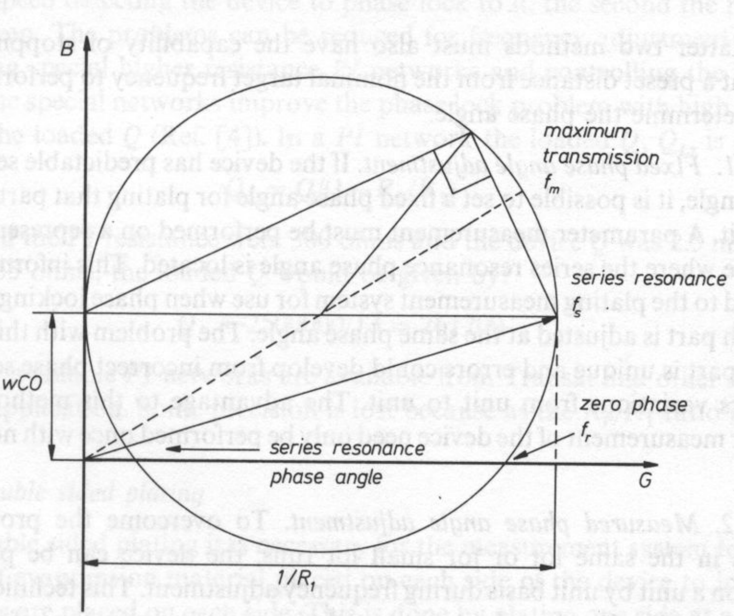

FIG. 8. Admittance circle representation

$$\begin{bmatrix} \Delta F_1 - F_2 \\ \Delta F_a \\ \Delta F_s \end{bmatrix} = \begin{bmatrix} \Delta F_1 - F_2 / \Delta F_1 & \Delta F_1 - F_2 / \Delta F_2 & \Delta F_1 - F_2 / \Delta F_s \\ \Delta F_a / \Delta F_1 & \Delta F_a / \Delta F_2 & \Delta F_a / \Delta F_s \\ \Delta F_s / \Delta F_1 & \Delta F_s / \Delta F_2 & \Delta F_s / \Delta F_s \end{bmatrix} \times \begin{bmatrix} F_1 \text{ plateback} \\ F_2 \text{ plateback} \\ F_s \text{ plateback} \end{bmatrix}$$

FIG. 9. Coupling matrix

To overcome this, the measurement system could phase lock to the crystal unit at series resonance f_S, at an angle above zero phase. Some devices will have no zero-phase series resonance frequency. This occurs when:

$$w_S C_0 R_1 \leqslant 1 \tag{11}$$

In this case, the measurement system is not capable of being phase locked at the series resonance frequency. To successfully adjust the measurement system must evaluate the crystal unit parameters, phase lock to a phase angle larger than the f_S angle, and adjust the crystal for a series frequency f_S not directly measurable.

The following modes of operation should be available from the plating measurement system to adequately adjust these types of devices:

- FIXED PHASE ANGLE ADJUSTMENT
- MEASURED PHASE ANGLE ADJUSTMENT
- MEASURED PHASE ANGLE ADJUSTMENT, NUMERICALLY OFFSET

The latter two methods must also have the capability of stopping frequency adjustment a preset distance from the nominal target frequency to perform a measurement to determine the phase angle.

6.3.4.1. Fixed phase angle adjustment. If the device has predictable series resonance phase angle, it is possible to set a fixed phase angle for plating that particular type of crystal unit. A parameter measurement must be performed on a representative device to evaluate where the series resonance phase angle is located. This information is then transferred to the plating measurement system for use when phase locking to the crystal units. Each part is adjusted at the same phase angle. The problem with this approach is that each part is unique and errors could develop from incorrect phase settings due to parameters variations from unit to unit. The advantage to this method is that the parameter measurement of the device need only be performed once with no further time penalty.

6.3.4.2. Measured phase angle adjustment. To overcome the problem of unit variations in the same lot or for small lot runs, the device can be parametrically analyzed on a unit by unit basis during frequency adjustment. This technique allows for measurement of each unit and subsequent plating at series resonance of the individual device. The method avoids the problem of using a single phase angle as in the FIXED PHASE ANGLE ADJUSTMENT but suffers from a time penalty because a parameter measurement is done on each device.

6.3.4.3. Variable phase angle adjustment, numerically offset. Numerical offsets need to be added to the previous *S1* method when series resonance angle of the device is at a phase angle smaller than the minimum phase lock angle of the transmission measurement system. This typically arises with higher frequency units at frequencies beyond 150 MHz. In this situation the target frequency can be based on an projected offset from the current phase lock frequency. The frequency adjustment process is:

a) final or direct plate the crystal unit at an elevated phase lock angle to a frequency above the final target frequency, $F_0 = F_T + \text{offset}$.

b) make a parameter measurement of the device calculating the current series resonance of the device F_{S1}.

c) using the current phase lock frequency, F_0 actual (Note: This is below the current series resonance frequency), offset the target frequency by:

$$F_T\,\text{new} = F_0\,\text{actual} - (F_{S1} - F_T) \tag{12}$$

d) finish plating the unit to the new target.

6.3.5. *High Q device plating*

High Q devices pose difficult measurement problems during frequency adjustments two problems occur when planting high Q devices the first is the requirement for phase meter speed detecting the device to phase lock to it, the second the rate of the frequency sweep. The problems can be reduced for frequency adjustment measurements by using special higher resistance *PI* networks and controlling the frequency sweep rate. The special networks improve the phase lock problem with high Q devices by reducing the loaded Q (Ref. [4]). In a *PI* network the loaded Q, Q_L, is given by:

$$Q_L = Q/(1 + R_P/R_1) \tag{13}$$

For example, if the *PI* resistance were 300 ohms and the device Q was 2.5 million and resistance of 35 ohms, the loaded Q would be given by:

$$Q_L = 2500000/13 = 261200 \tag{14}$$

Commercially available *PI* networks are available from Transat and other sources to support this application. Some precision is lost because as the R_P/R_1 ratio gets large.

6.3.6. *Double sided plating*

With double sided plating it is necessary for the measurement system to monitor the amount of evaporation material placed on each side of the device to insure that equal amounts are placed on each side. This is done by plating one side at a time and tracking the change in frequency and switching to the other side when the plating process is fifty percent completed.

6.3.7. *Direct plating*

Direct or one shot plating of crystals is well described in (Ref. [9]). Direct plating requires the measurement system to attempt to monitor the device as the electrodes are initially placed on the device. To do this the system must wait for the device to "activate", then lock to the crystal unit as soon as is possible. Practically, this can be done by letting the measurement device monitor a frequency a predetermined distance above the target while plating the part. As the device "passes" this location, the system must immediately phase lock to the device and track it until plating is completed. This requires logic in the system to determine (1) when to stop waiting for the device, and (2) when to start frequency tracking. The speed of the phase lock system must be sufficient to capture the device as it passes the monitor frequency setting.

6.3.8. *Network communication*

Network communication capability with a host computer system has become a requirement in many installations where the plating system must retrieve configuration, targeting and model information from a factory management system. Also, lot tracking and process control parameters are often direct to and from the management system rather than being located on the frequency adjustment system.

6.3.9. *Configuration files*

The use of configuration or model files for the frequency adjustment systems is mandatory to allow rapid reconfiguration of the adjustment systems without recalibration.

6.4. *Monolithic two-pole filter measurement and adjustment*

A number of methods have been developed for adjusting monolithic twopole filters. One method is based on adjusting the short circuit amplitude versus frequency response. Another is based on oscillator measurements monitoring two resonator frequencies and bandwidth and adjust all three. A third method utilizes two short circuit and two open circuit measurements for deriving the filter frequencies (Ref. [17]). Each of these methods suffers when attempting to monitor and adjust higher frequency devices beyond about 50 MHz.

6.4.1. *Measurement techniques*

For high frequency twopole adjustment, the problem is divided into two areas, measurement and masking. Although effective measurement techniques have been developed for measuring the devices, they do not have the speed required for production frequency adjustment systems (Ref. [10], [18]).

Special networks and instrumentation must be utilized to monitor the filter under the dynamic adjustment situations. Commercially available networks have been developed for measuring and adjusting monolithic two-pole filters up to 100 MHz and beyond. These networks are available in commercial automatic frequency adjustment equipment (Ref. [20]). This network enables the individual monitoring of two resonator frequencies as well as bandwidth.

6.4.2. *Mask problem*

As the geometries of the high frequency filter get smaller, the mask positioning and alignment become critical. So much so that it becomes impractical to assume that the mask effects are consistent from one device to another or even on the same device as it is adjusted. This places a severe strain on the frequency adjustment system attempting to adjust the device.

A solution to this problem is dynamic modeling of the crystal and the mask effects during the frequency adjustment process. To accomplish this, the measurement and adjustment system must rapidly and repeatedly characterize the device during the adjustment process.

6.4.3. *Coupling matrix*

If the system can rapidly measure the four characteristic frequencies of the device, a model of the mask effect can be developed called the coupling matrix (Fig. 10). In matrix form:

$$T = CPB \tag{15}$$

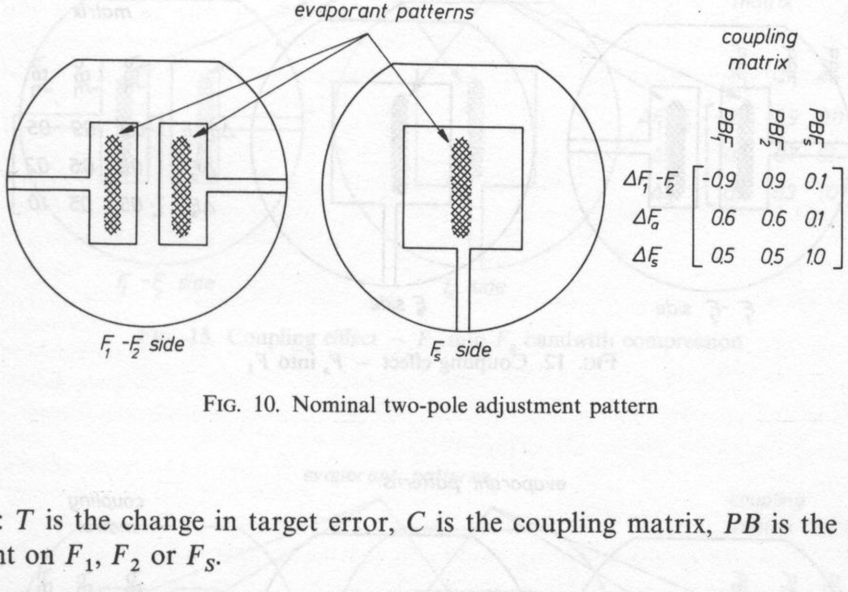

FIG. 10. Nominal two-pole adjustment pattern

where: T is the change in target error, C is the coupling matrix, PB is the plating amount on F_1, F_2 or F_S.

The coupling matrix defines the effect of plating F_1, F_2 or bandwidth, F_S on the target parameters; F_1, F_2 Symetry, F_a and F_s. The amount of plateback to use on a given resonator can be derived by:

$$C^{-1}T = PB \tag{16}$$

where: C^{-1} is the inverse of the coupling matrix.

Figures 11 through 18 show how the coupling matrix might shift for a given type of mask alignement.

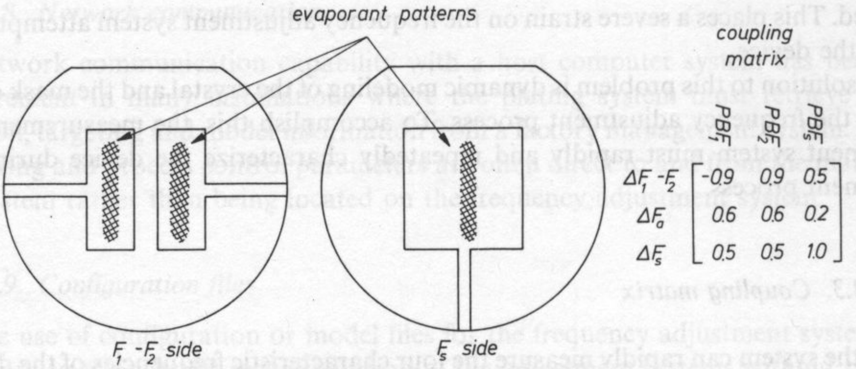

FIG. 11. Coupling effect − F_s into F_2

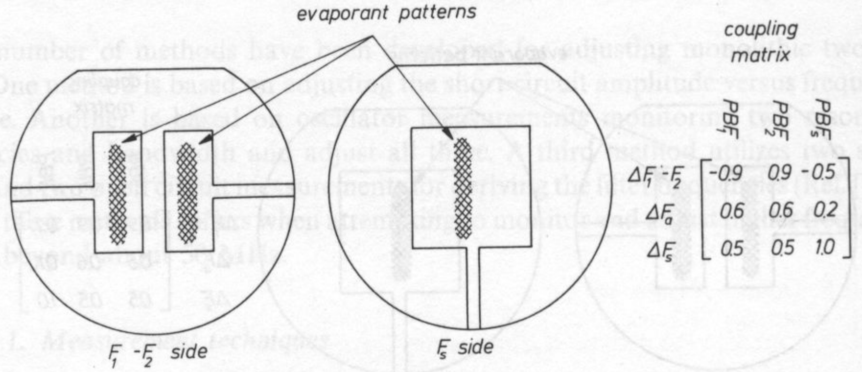

FIG. 12. Coupling effect − F_s into F_1

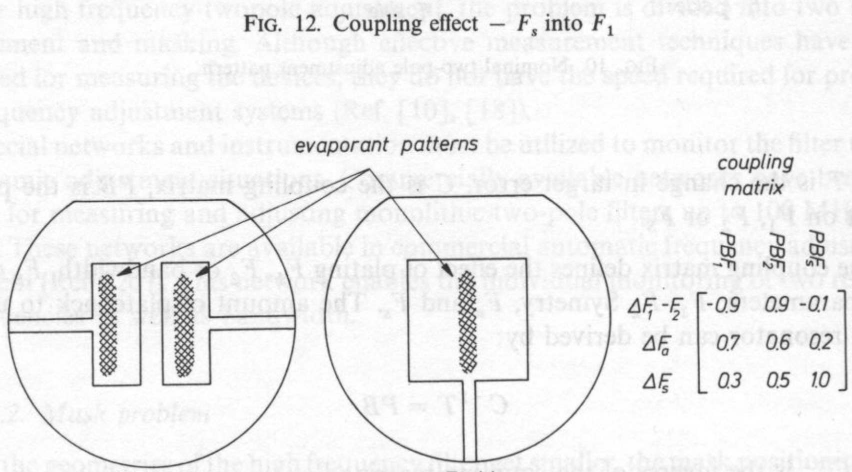

FIG. 13. Coupling effect − F_1 *into* F_a bandwith compression

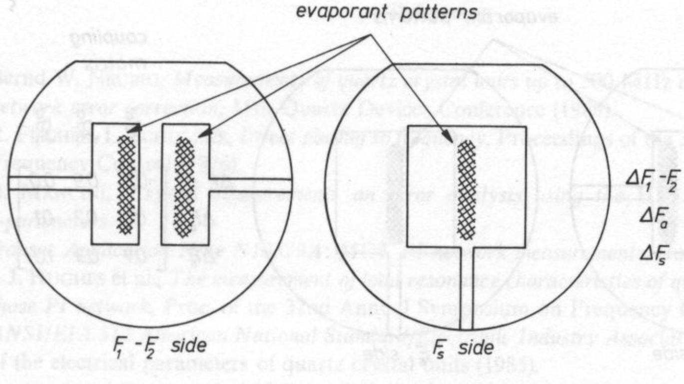

coupling matrix

$$\begin{array}{c|ccc} & PBF_1 & PBF_2 & PBF_s \\ \Delta F_1-F_2 & -0.9 & 0.9 & 0.0 \\ \Delta F_a & 0.3 & 0.6 & 0.1 \\ \Delta F_s & 0.7 & 0.5 & 1.0 \end{array}$$

FIG. 14. Coupling effect — F_1 into F_s

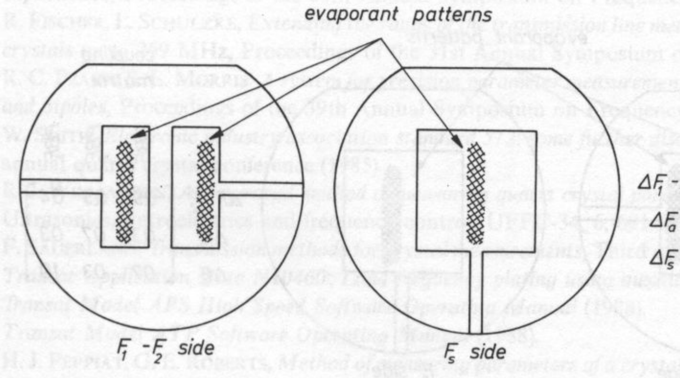

coupling matrix

$$\begin{array}{c|ccc} & PBF_1 & PBF_2 & PBF_s \\ \Delta F_1-F_2 & -0.9 & 0.9 & 0.0 \\ \Delta F_a & 0.5 & 0.7 & 0.1 \\ \Delta F_s & 0.5 & 0.3 & 1.0 \end{array}$$

FIG. 15. Coupling effect — F_2 into F_a bandwith compression

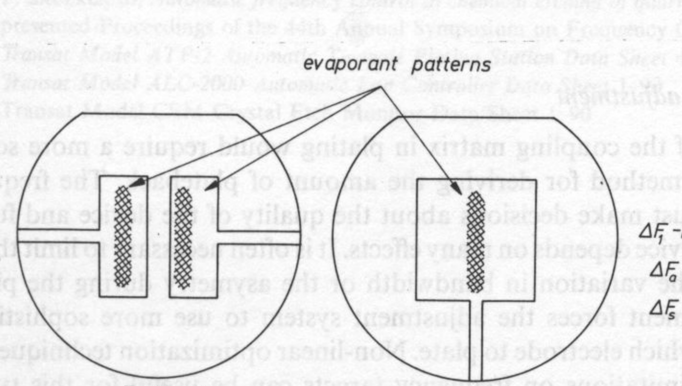

coupling matrix

$$\begin{array}{c|ccc} & PBF_1 & PBF_2 & PBF_s \\ \Delta F_1-F_2 & -0.9 & 0.9 & 0.0 \\ \Delta F_a & 0.5 & 0.3 & 0.2 \\ \Delta F_s & 0.5 & 0.7 & 1.0 \end{array}$$

FIG. 16. Coupling effect — F_2 *into* F_s bandwith expansion

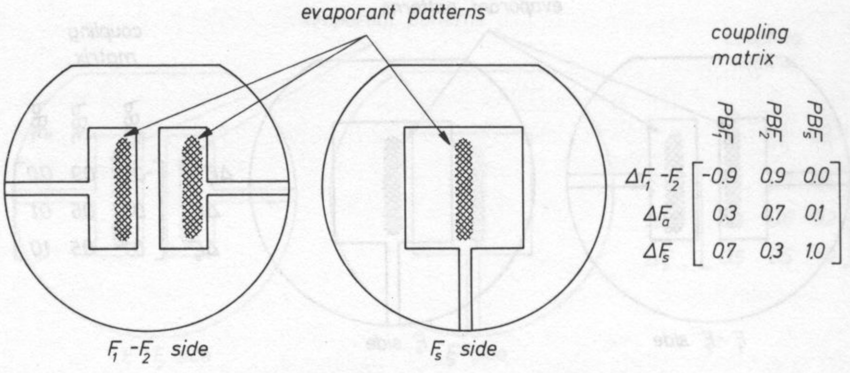

FIG. 17. Coupling effect — F_1, F_2 shifted

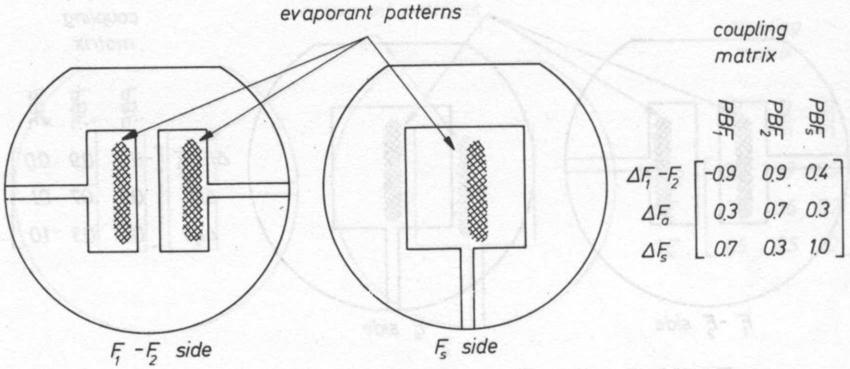

FIG. 18. Coupling effect — F_1, F_2, F_S *shifted mask shift effect*

6.4.4. Frequency adjustment

The utilization of the coupling matrix in plating would require a more sophisticated measurement method for deriving the amount of plateback. The frequency adjustment system must make decisions about the quality of the device and further improvement in the device depends on many effects. It is often necessary to limit the size of a plateback step, the variation in bandwidth or the asymetry during the plating process. This requirement forces the adjustment system to use more sophisticated algorithms to decide which electrode to plate. Non-linear optimization techniques that allow for boundary limitations on frequency targets can be useful for this type of system. These techniques could allow for reasonable adjustment of devices even though misalignment occurs.

References

[1] Bernd W. Neubig, *Measurements of quartz crystal units up to* 500 MHz *and above by the use of a PI network error correction*, 11th Quartz Devices Conference (1989).

[2] R. Fischer, L. Schulzke, *Direct plating to frequency*, Proceedings of the 30th Annual Symposium on Frequency Control (1976).

[3] B. Mancini, *Crystal measurement: an error analysis using the* HP3577 *network analyzer with S-parameters*

[4] *Transat Application Note N10379A: MCT PI network measurements*, (July 18, 1983 and Fe., 1989).

[5] S. J. Hughes et al., *The measurement of load resonance characteristics of quartz crystals using the zero phase PI network*, Proc. of the 32nd Annual Symposium on Frequency Control 1978.

[6] *ANSI/EIA 512 American National Standard/Electronic Industry Association*, Standard measurement of the electrical parameters of quartz crystal units (1985).

[7] International Electrotechnical Commission, *Basic method for the measurement of resonance frequency and equivalent series resistance of quartz units by zero phase technique in a PI network*, Publication 444 1st Ed., (1973).

[8] W. J. Horton et al., *Comparison of methods for measurement of quartz crystal resonators with load capacitance*, Proceedings of the 35th Annual Symposium on Frequency Control (1981).

[9] R. Fischer, L. Schulzke, *Extending the range of the transmission line method for measurement of quartz crystals up to* 259 MHz, Proceedings of the 31st Annual Symposium on Frequency Control (1977).

[10] R. C. Peach, S. E. Morris' *A system for precision parameter measurements on quartz crystal resonators and bipoles*, Proceedings of the 39th Annual Symposium on Frequency Control (1985).

[11] W. Smith, *Electronic industry association standard 512: some further discussion and comment*, Seventh annual quartz crystal conference (1985).

[12] R. J. Williamson, *An improved method of measuring quartz crystal parameters.* IEEE Transactions on Ultrasonics, Ferroelectrics and frequency control, UFFC-34, 6, 681-689 (1987).

[13] F. Sauerland, *Transmission methods for crystal measurements*, Third quartz crystal conference (1981).

[14] *Transat Application Note N10460: Load frequency plating using auxiliary series capacitors* (1984).

[15] *Transat Model APS High Speed Software Operating Manual* (1988).

[16] *Transat Model ATP Software Operating Manual* (1988).

[17] H. J. Peppiat, G. E. Roberts, *Method of measuring parameters of a crystal filter*, U. S. Patent 4, 093, 914 (June 1978).

[18] R. Kinsman, R. Uskali, *Equivalent circuit characterization of two-pole monolithic filters using S-parameters*, 8th quartz crystal conference (1986).

[19] F. Sauerland, *Automatic frequency control in chemical etching of quartz crystal blanks*, Paper to be presented Proceedings of the 44th Annual Symposium on Frequency Control 1990

[20] *Transat Model ATP-2 Automatic Twopole Plating Station Data Sheet 4-87*

[21] *Transat Model ALC-2000 Automatic Lap Controller Data Sheet* 1–90

[22] Transat Model CEM Crystal Etch Monitor Data Sheet 1–90